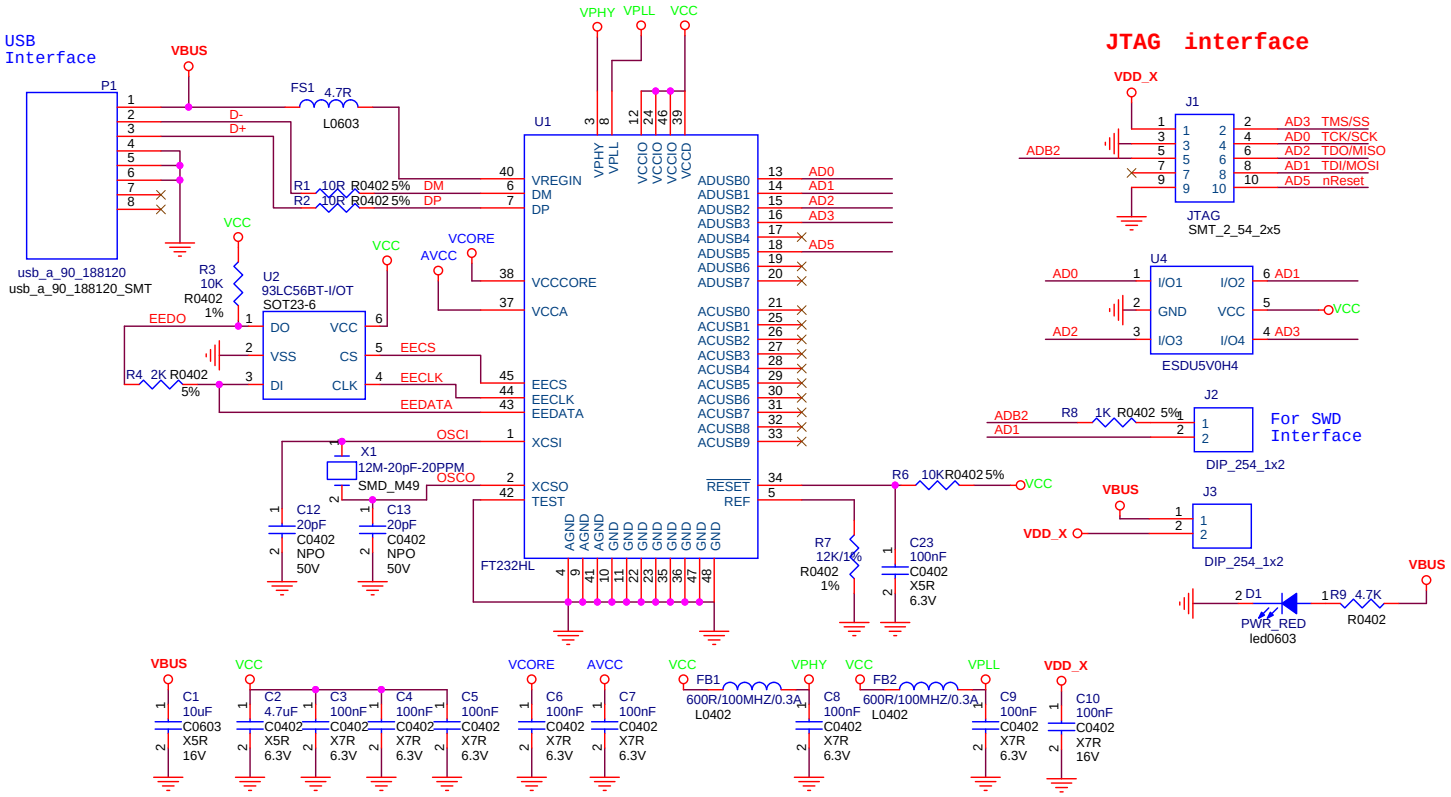


| | |
|---|---|
| PINE64 | PINE64 |
| Title | PINE64 USB JTAG Adapter ver 1.0 20201215 |
| Size B | Document Number | Rev |
| Date: Tuesday, December 15, 2020 | Sheet 1 of 1 |