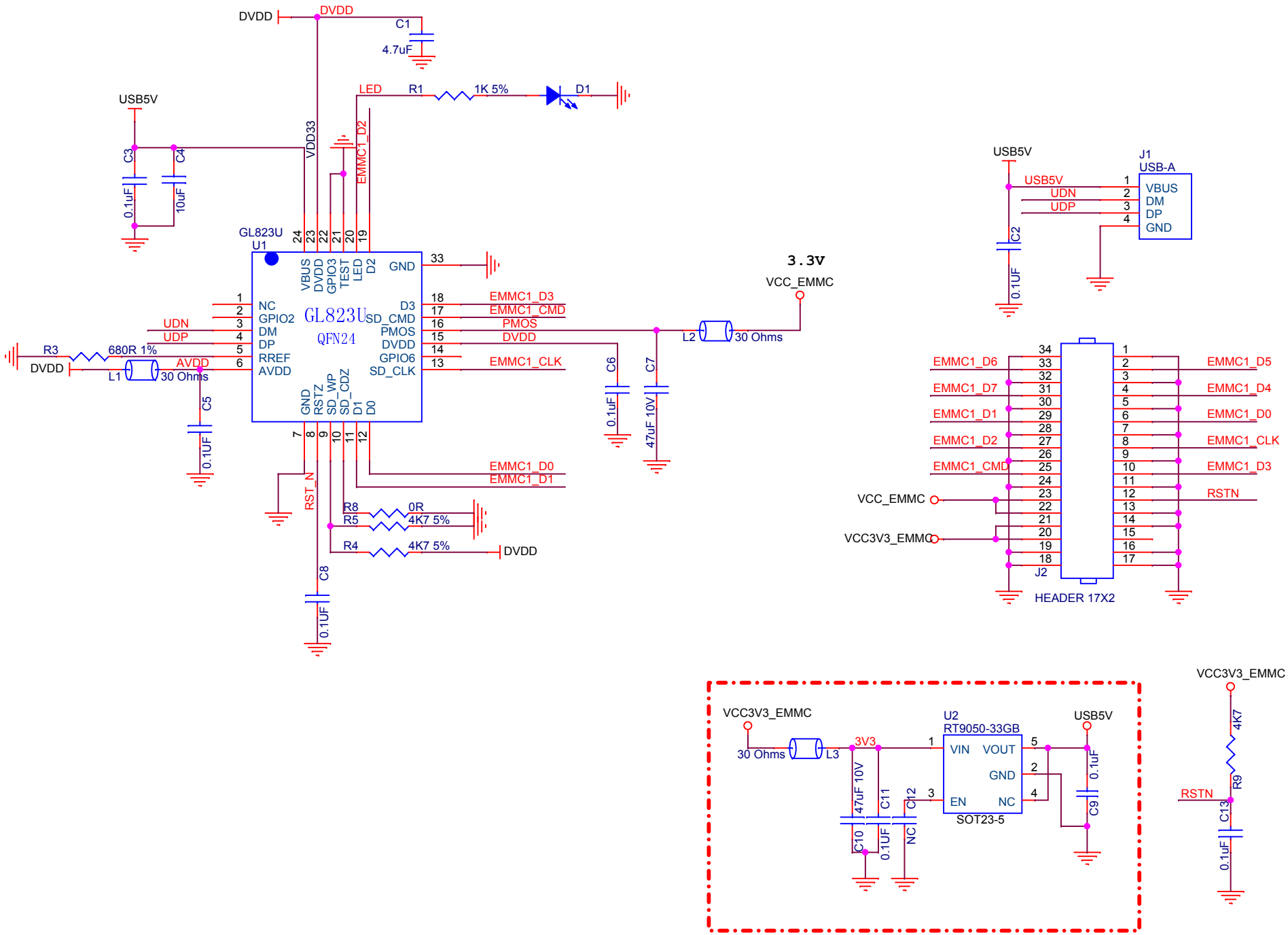
DVDD
C1
4.7uF
USB5V
C3
0.1uF
C4
10uF
VDD33
LED
R1
1K 5%
D1
EMMC1_D2
GL823U
U1
GL823U
QFN24
VBUS
DVDD
GPIO3
TEST
LED
D2
GND
NC
GPIO2
DM
DP
RREF
AVDD
D3
SD_CMD
PMOS
DVDD
GPIO6
SD_CLK
GND
RSTZ
SD_WP
SD_CDZ
D1
D0
UDN
UDP
R3
680R 1%
L1
30 Ohms
C5
0.1UF
EMMC1_D3
EMMC1_CMD
PMOS
DVDD
EMMC1_CLK
EMMC1_D0
EMMC1_D1
RST_N
R8
0R
R5
4K7 5%
R4
4K7 5%
C8
0.1UF
C6
0.1uF
C7
47uF 10V
L2
30 Ohms
3.3V
VCC_EMMC
USB5V
J1
USB-A
VBUS
DM
DP
GND
C2
0.1UF
EMMC1_D6
EMMC1_D7
EMMC1_D1
EMMC1_D2
EMMC1_CMD
EMMC1_D5
EMMC1_D4
EMMC1_D0
EMMC1_CLK
EMMC1_D3
RSTN
VCC_EMMC
VCC3V3_EMMC
J2
HEADER 17X2
VCC3V3_EMMC
30 Ohms
L3
3V3
47uF 10V
C11
C12
C10
0.1UF
NC
U2
RT9050-33GB
VIN
VOUT
GND
EN
NC
SOT23-5
USB5V
0.1uF
C9
VCC3V3_EMMC
4K7
R9
RSTN
C13
0.1uF